REVISIONS			
REV.	DESCRIPTION	DATE	DCN NO
-	FOR QUOTING PURPOSES ONLY		

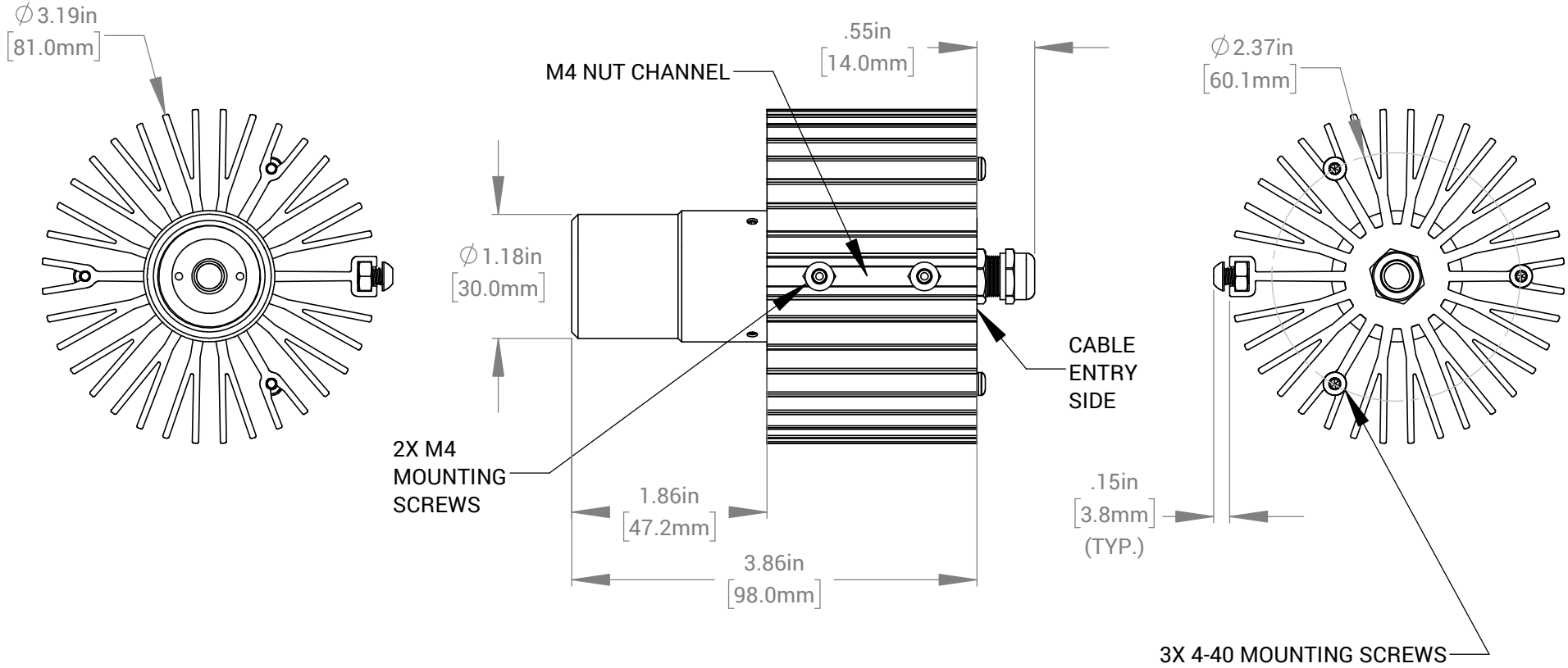

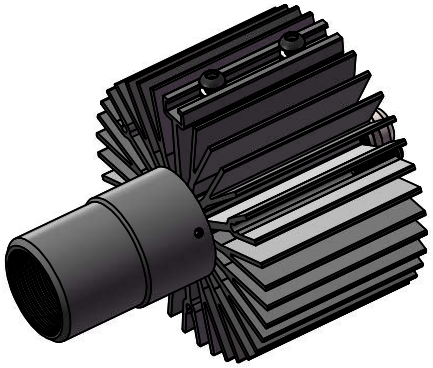

FOR REFERENCE ONLY

UNIT WEIGHT: .80 lbs

PROPRIETARY AND CONFIDENTIAL

THESE DRAWINGS AND SPECIFICATIONS ARE THE EXCLUSIVE PROPERTIES OF ADVANCED ILLUMINATION INCORPORATED ISSUED IN STRICT CONFIDENCE AND SHALL NOT, WITHOUT THE PRIOR WRITTEN PERMISSION OF ADVANCED ILLUMINATION INC BE REPRODUCED, COPIED OR USED FOR ANY PURPOSE WHATSOEVER EXCEPT THE MANUFACTURE OF ARTICLES FOR ADVANCED ILLUMINATION INC

CUT USING: -

NEXT ASSY	USED ON
APPLICATION	

UNLESS OTHERWISE SPECIFIED:

SURFACE SHOULD BE FREE OF SCRATCHES, BURRS, AND DENTS

DIMENSIONS ARE IN: INCHES

TOLERANCES

FRACTIONAL ± 1/16

ANGULAR: MACH ± 1 BEND ± 1

TWO PLACE DECIMAL ± .010

THREE PLACE DECIMAL ± .005

MAKE FROM

-

	DATE	NAME
DRAWN	15-APR-20	T.MILLS
CHECKED	--	--
APPROVED	--	--

MATERIAL

-

FINISH

-

ADVANCED ILLUMINATION

440 STATE GARAGE ROAD,
ROCHESTER, VERMONT 05767

TITLE:

DRAWING, INSTALLATION
MODEL, SL256

SIZE	DWG. NO.	REV
A	SL256	-

SCALE: NTS | C CODE: - | SHEET 1 OF 1

O:\DESIGN ENGINEERING\INSTALLATION MODELS\SPOT LIGHTS\SL256\

1160.050006 REV-