REVISIONS			
REV.	DESCRIPTION	DATE	DCN NO
-	FOR QUOTING PURPOSES ONLY		

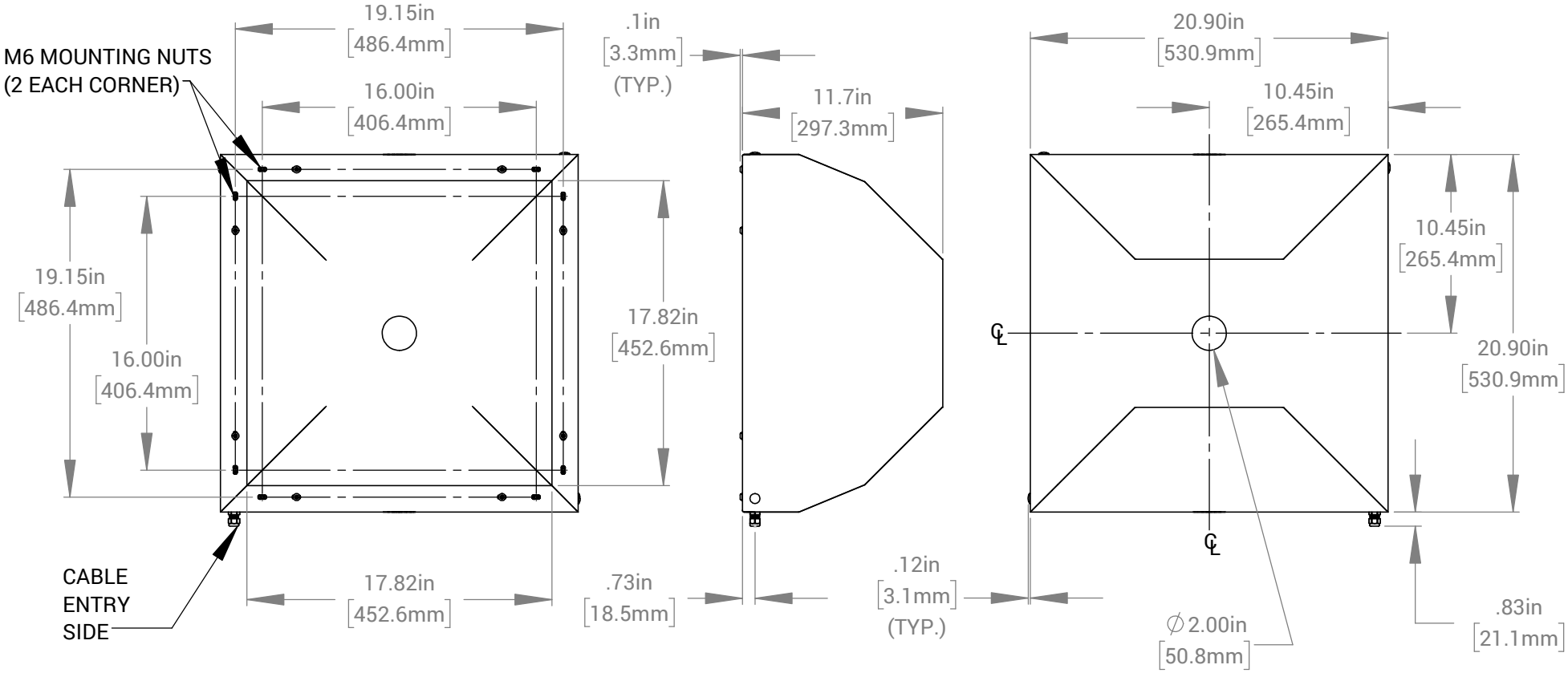

UNIT WEIGHT: 13.6 lbs

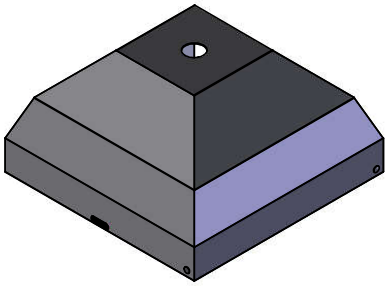

FOR REFERENCE ONLY

PROPRIETARY AND CONFIDENTIAL
THESE DRAWINGS AND SPECIFICATIONS ARE THE EXCLUSIVE PROPERTIES OF ADVANCED ILLUMINATION INCORPORATED ISSUED IN STRICT CONFIDENCE AND SHALL NOT, WITHOUT THE PRIOR WRITTEN PERMISSION OF ADVANCED ILLUMINATION INC BE REPRODUCED, COPIED OR USED FOR ANY PURPOSE WHATSOEVER EXCEPT THE MANUFACTURE OF ARTICLES FOR ADVANCED ILLUMINATION INC

CUT USING:	
NEXT ASSY	USED ON
APPLICATION	

UNLESS OTHERWISE SPECIFIED:
SURFACE SHOULD BE FREE OF SCRATCHES, BURRS, AND DENTS
DIMENSIONS ARE IN: INCHES
TOLERANCES
FRACTIONAL ± 1/16
ANGULAR: MACH ± 1 BEND ± 1
TWO PLACE DECIMAL ± .010
THREE PLACE DECIMAL ± .005
MAKE FROM
-

	DATE	NAME
DRAWN	13-MAY-21	T.MILLS
CHECKED	--	--
APPROVED	--	--

MATERIAL
-
FINISH
-

ADVANCED ILLUMINATION
440 STATE GARAGE ROAD,
ROCHESTER, VERMONT 05767

TITLE:
DRAWING, INSTALLATION, DL071

SIZE	DWG. NO.	REV
A	DL071	-

SCALE: NTS | C CODE: - | SHEET 1 OF 1

O:\DESIGN ENGINEERING\INSTALLATION MODELS\DIFFUSE LIGHTS\DL071\

1160.050006 REV-